LUXOR®

60 YEARS OF ITALIAN TRADITION

Luxor is an important industrial reality, world wide and European market leader in the production of flexible hoses and components for hydro and thermo-sanitary installations. Luxor has been the expression of the most prestigious made in Italy and the great Italian high technology mechanical workings tradition for fifty years; a quality certified and recognized by the most prestigious International Certification Institutes all over the world.

Our mission is the complete customer satisfaction through a process of continuous technological research in order to make high quality, reliable products, anticipating the market evolutions by innovative partnership with both customers and suppliers. Luxor mission takes place in its own Research and Development Centre in which new and advanced technologies are constantly analyzed and researched with continuous investments to offer the most innovative and reliable solutions for the international markets at competitive costs, ensuring strict quality controls on each single piece.

Luxor entirely plans and realizes each product, thanks to its decennial know how. The great production strength, a "slender" innovative and advanced industrial organization together with a modern logistic conception, make Luxor able to satisfy every kind of request, even customized, with fast deliveries all over the world.

Luxor is certified
ISO 9001:2015
by DEKRA Group
certification body

CERTIFICATION

UNI EN 215 *EUROPE*	KIWA-UNI *ITALY*	DVGW *GERMANY*	*GERMANY*	*GERMANY*	TÜV *GERMANY*	QB *FRANCE*	*FRANCE*	SVGW *SWITZERLAND*	WRAS *GREAT BRITAIN*
VA *DENMARK*	SINTEF *NORWAY*	RISE *SWEDEN*	KIWA *HOLLAND*	PZH *POLAND*	UKRSEPRO *UKRAINE*	NSF *USA*	IAPMO *U.S. / CANADA*	GOST-R *RUSSIA*	WATERMARK *AUSTRALIA*

Please contact our offices for information about technical specifications and certified products or visit the website of the corresponding certification body for the latter.

Please refer to www.nsf.org for a complete list of NSF approved products.
Please refer to www.iapmort.org for a complete list of UPC/cUPC approved products.

LUXOR®

FLEXIBLE HOSES

FLEXIBLE HOSES

Luxor's Flexible hoses are first rate Made in Italy products, reliable and top quality products worldwide renowned.

The excellent mechanical and hygienic features, the easiness of their installation and the good value of this product find a continuously increasing appreciation by installers and merchants. The constant attention given to the market demands, to customers' requirements and to the hygienic and environmental obligations, make Luxor's flexible hoses a clear point of reference in the sanitary-plumbing market.

Luxor's flexible hoses are the ideal solution for any type of installation for the distribution of sanitary and drinking water: reliable, easy to fit, cost effective. Luxor's industrial manufacturing process represents the state of the art for the high technology of the production machinery which guarantee a perfect production in every single step.

The hoses are thoroughly checked through severe quality controls, including high resolution photo-camera devices which can detect 100% any possible fault occurred during the production process.

Luxor's Company's Quality System and Luxor's flexible hoses are approved and certified by the most important International Institutes, which recognize and appreciate, besides the product technical qualities, also the Company's policy clearly addressed towards the customer's satisfaction and to the accomplishment to the rules requirements compulsory to the manufactured goods.

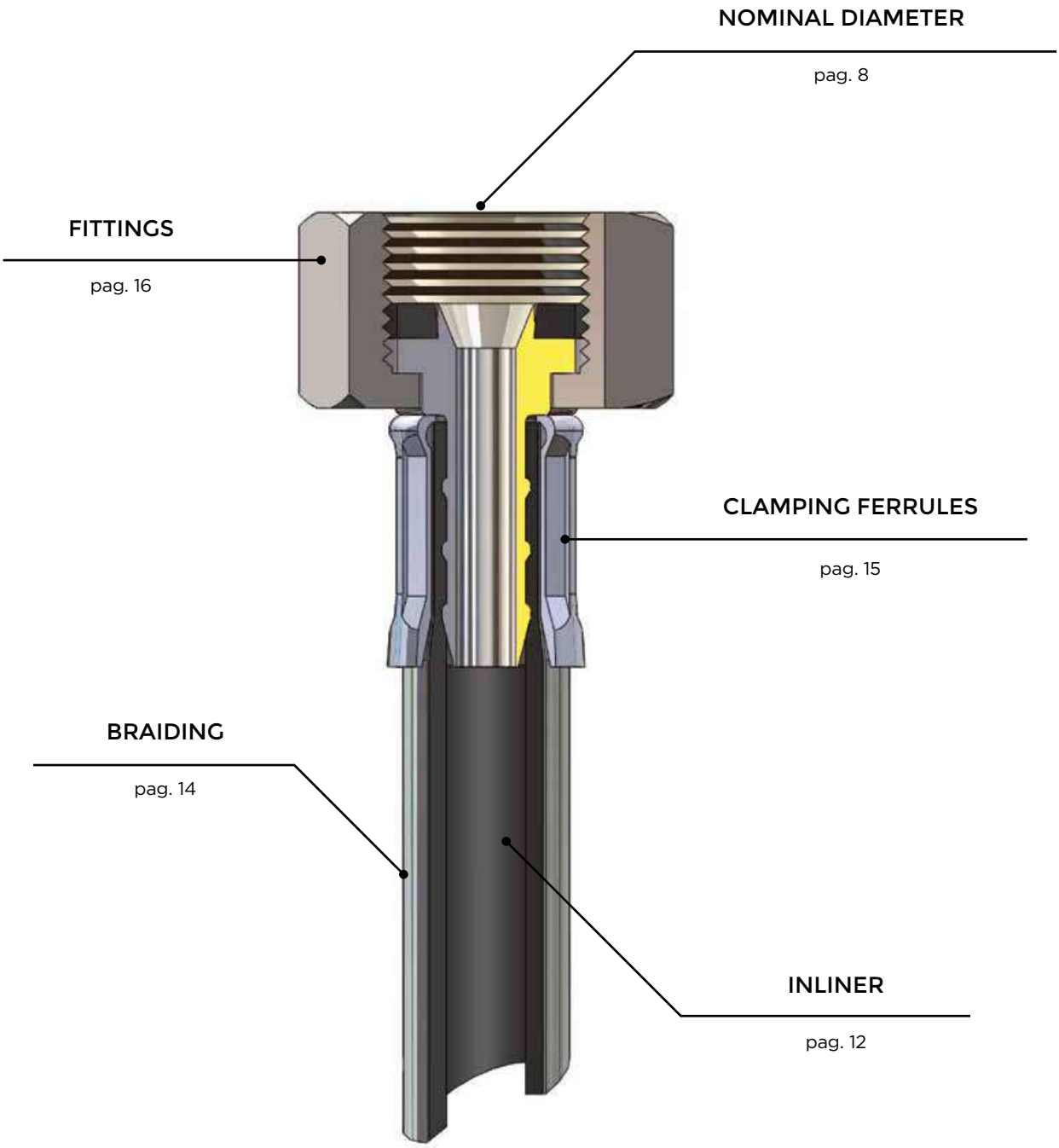

APPLICATIONS

pag. 10

APPROVALS

pag. 20

ASSEMBLY INSTRUCTIONS

pag. 118

LENGTH INSTRUCTIONS

pag. 120

NOMINAL DIAMETER

Luxor Spa's range of hoses comprises products which comply with the most prominent international standards and the current European norm EN13618:2017.
The table below shows the most relevant technical features for every nominal diameter, as well as the availability with silicone, TP, EPDM, PEX and butyl inliner.

Inliner Range	Nominal Diameter	Inner ø mm	Outer ø mm	Min bending radius	Inner fittings ø mm	Flow rate at 3 bar	Max working pressure	Max working temperature	Min working temperature	Available Fittings	Available Braidings
Silicone, EPDM, Thermoplastic, PEX	DN6	6,3	10	40	4,7	16 l/min	10 Bar	70° C	-5° C	Brass, stainless steel, plastic	Stainless steel, nylon PA 6.6
Silicone, EPDM, Thermoplastic	DN8	8,5	12	48	6,2	28 l/min	10 Bar	70° C	-5° C	Brass, stainless steel, plastic	Stainless steel, nylon PA 6.6
Butyl	DN8	8,5	12	48	6,2	28 l/min	10 Bar	90° C	-20° C	Brass	Stainless steel
EPDM, Thermoplastic	DN10	9,4	13	56	7,5	46 l/min	10 Bar	70° C	-5° C	Brass, copper, stainless steel, plastic	Stainless steel, nylon PA 6.6
Butyl	DN10	9,4	13,5	56	7,5	46 l/min	10 Bar	90° C	-20° C	Brass	Stainless steel
Silicone, EPDM, Thermoplastic	DN13	12,5	18	72	10	74 l/min	10 Bar	70° C	-5° C	Brass, copper, stainless steel, plastic	Stainless steel, nylon PA 6.6
Butyl	DN13	12,5	18	72	10	74 l/min	10 Bar	90° C	-20° C	Brass	Stainless steel
EPDM	DN15	15	20	80	12,5	83 l/min	10 Bar	110° C	-5° C	Brass, copper, stainless steel, galvanised steel	Stainless steel, galvanised steel
Butyl	DN15	15	20	80	12,5	83 l/min	10 Bar	90° C	-20° C	Brass	Stainless steel
Silicone, EPDM	DN18	19	26	104	15,5	200 l/min	10 Bar	110° C	-5° C	Brass, copper, stainless steel, galvanised steel	Stainless steel, galvanised steel
Butyl	DN18	19	26	104	15,5	200 l/min	10 Bar	90° C	-20° C	Brass	Stainless steel
Silicone, EPDM	DN25	25,5	33	132	21	280 l/min	10 Bar	110° C	-5° C	Brass, copper, stainless steel, galvanised steel	Stainless steel, galvanised steel
Butyl	DN25	25,5	33	132	21	280 l/min	10 Bar	90° C	-20° C	Brass	Stainless steel
Silicone, EPDM	DN32	32	42	168	27	490 l/min	6 Bar	110° C	-5° C	Brass, stainless steel, galvanised steel	Stainless steel, galvanised steel
Butyl	DN32	32	42	168	27	490 l/min	6 Bar	90° C	-20° C	Brass	Stainless steel
EPDM	DN40	40	53	212	32	800 l/min	6 Bar	110° C	-5° C	Brass, stainless steel, galvanised steel	Stainless steel, galvanised steel
EPDM	DN50	50	65	275	41	1300 l/min	6 Bar	110° C	-5° C	Brass, stainless steel, galvanised steel	Stainless steel, galvanised steel

Silicone · EPDM · Thermoplastic · PEX · Butyl

Please contact our technical department for further information

FLOW RATE CHARTS

Flow capacity diagram on hoses with straight fittings, length 1400 mm.

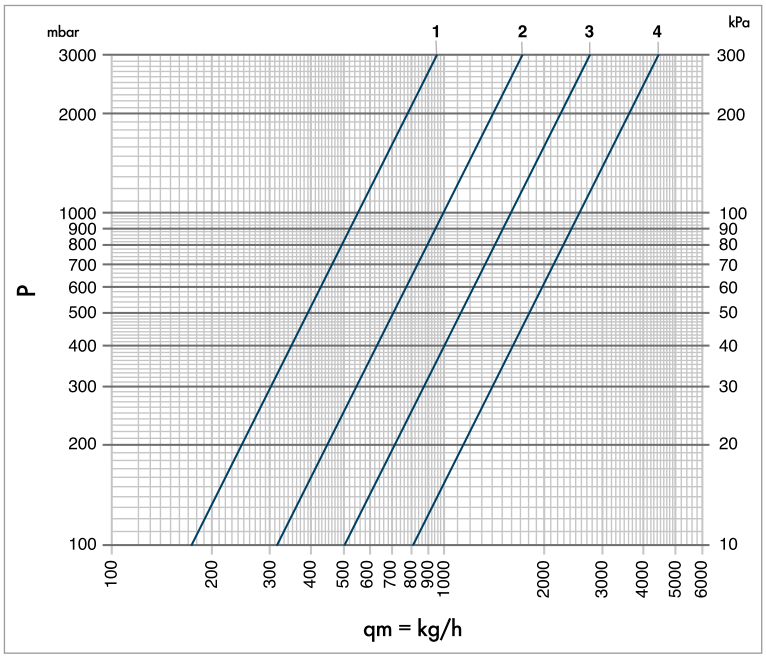

HOSE DIMENSIONS	POS	Kv	Flow l/min con ΔP 3 bar
DN 6	1	0,55	16
DN 8	2	0,97	28
DN 10	3	1,59	46
DN 13	4	2,56	74

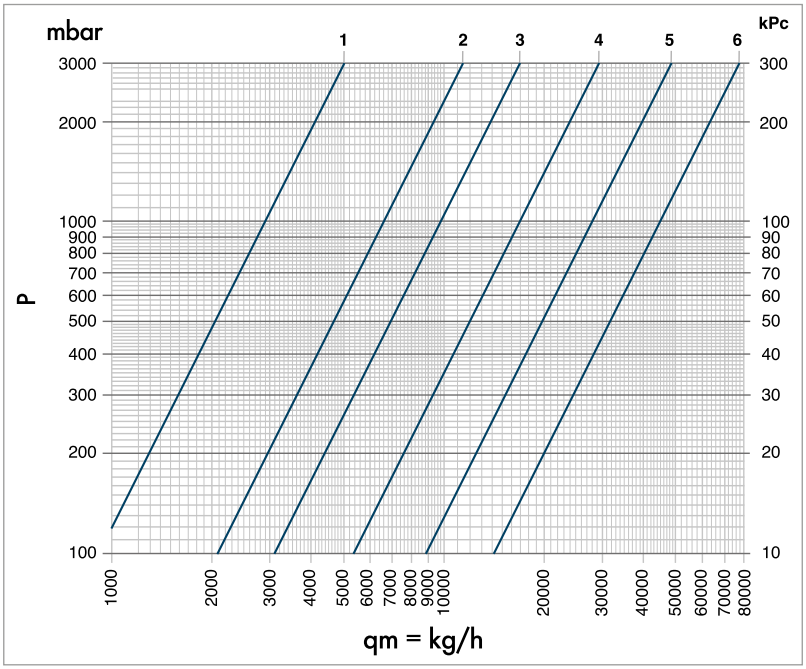

HOSE DIMENSIONS	POS	Kv	Flow l/min con ΔP 3 bar
DN 15	1	2,9	83
DN 18	2	6,6	200
DN 25	3	9,8	280
DN 30	4	17	490
DN 40	5	28	800
DN 50	6	45	1300

APPLICATIONS

Luxor Spa's flexible hoses are the ideal solution for every application, both sanitary and industrial. They are safe and easy to install.

The table below shows some of the most common applications, as well as the availability with silicone, TP, EPDM, PEX and butyl inliner.

traditional taps

mixers

heating systems

flushing tanks

boilers

kitchen pull-out shower

generic installations

conditioning systems / fan coil

washing machines

mounting columns

water heaters

dishwasher

shower cabins

whirpools

pumps

coffee machines

radiant ceiling panels

Inliner Range	Nominal diameter	Single-lever mixer taps	Two-handle faucets	Mixers	Pull-out shower faucets	Single-hole mixer taps	Coffee machines	Cisterns	Water installations	Sanitary systems	Boilers	Inlet hoses	Water meters	Whirlpools	Shower cubicles	Fancoils	Heating systems	Pumps	Autoclaves	Heat pumps	Air-conditioning systems	Greenhouses	Risers	Common installations	Radiant ceiling panels
	DN6	●		●			●																		
	DN8	●	●	●	●	●	●	●	●	●	●					●	●				●				●
	DN10		●						●	●	●	●				●	●				●				●
	DN13								●		●	●	●	●	●	●	●				●				●
	DN15										●						●	●	●	●	●	●	●	●	
	DN18																●	●	●	●	●	●	●	●	
	DN25																●	●	●	●	●	●	●	●	
	DN32																●	●	●		●	●	●	●	
	DN40																●	●	●			●	●	●	
	DN50																●	●	●			●	●	●	

Silicone EPDM Thermoplastic PEX Butyl

INLINER

SILICONE

Silicone, a noble high-quality material, has gained growing recognition on sanitary markets at an international level.

It is the most hygienic material available on the market and guarantees complete purity. Outstanding elasticity and excellent mechanical properties throughout the temperature range exemplify its characteristics.

THERMOPLASTIC

As the result of years of R&D of noble and high-performance materials, TP combines the purity and hygiene of PEX and silicone with the outstanding mechanical properties of EPDM.

Flexibility, versatility and usability make Luxor TP hoses a high-quality product certified by the most prominent international institutes. Luxor TP hoses were developed in order to protect the end users' wellbeing and the environment by being hygienically pure and completely recyclable.

EPDM

EPDM rubber is the most widespread inliner material. Available in various compounds, it shows excellent hygienic and mechanical characteristics as well as resistance to oxidation, environmental factors and high temperatures.

PEX

PEX is a thermoplastic material endowed with excellent hygienic properties which does not affect the taste and smell of water throughout the temperature range. PEX hoses have established themselves on the market as a good alternative to EPDM.

BUTYL

Butyl is a material with low oxygen permeability. This feature makes it suitable for all closed circuit applications where oxygen creates corrosion.

PROPERTIES	SILICONE	THERMOPLASTIC	EPDM	PEX	BUTYL
Hygienic Purity	●●●●●	●●●●	●●●	●●●●	-
Mechanical Resistance	●●●	●●●●	●●●●●	●●●	●●●
Resistance to Temperature	●●●●●	●●●●	●●●●●	●●	●●●
Durability	●●●●●	●●●●●	●●●●	●●●	●●●●
Flexibility	●●●●●	●●●●●	●●●●	●	●●●
Approvals	●●●●●	●●●●●	●●●	●●●	-
Range	●●●●	●●●	●●●●●	●	●●●●
Versatility	●●●●●	●●●	●●●●●	●	●

● Sufficient ●● Discrete ●●● Good ●●●● Very Good ●●●●● Excellent

BRAIDING

The external reinforcing braiding is made using stainless steel threads AISI 304 ø 0,20 mm, ø 0,22 mm, galvanized steel threads ø 0,30 mm and Nylon threads PA 6.6 ø 0,25 mm and ø 0,30 mm.

These threads, joined to become plaits are assembled so to cover completely the inner pipe giving to the flexible hose the faculty to sustain the normal working pressure and the possible overpressure which can occur during an ordinary performance of the hydraulic system.

STAINLESS STEEL THREADS

The stainless steel threads have a minimum ø 0,20 mm, a higher dimension of the one normally employed by other producers, so to guarantee a safe and reliable top quality product. Thanks to this excellent covering material, Luxor's flexible hoses have successfully passed the most severe mechanical tests of European and International Certification Institutes of the hydrosanitary field.

NYLON THREADS

The Nylon PA 6.6 threads also assure excellent resistance and good mechanical qualities thanks to the elasticity of material and the good performance at high and low temperature. Flexible hoses with braiding in Nylon PA 6.6 have found a large market in the kitchen mixers with pull-out showers for example, due to their good performance and their resistance to the wear and tear due to the friction rub and to the low noise produced during the normal daily use.

BRAIDING

The braiding percentage of covering can change in accordance to the specific product requests and to the customer's requirements, going from a 97% cover until 80%.

The 97% braiding covers perfectly the inner pipe making the flexible hose mechanically more resistant to the strains and giving a better aesthetic exterior.

The thread dimension, the quality of the material and the covering percentage of the braiding distinguish Luxor's hoses, products with a high quality profile, from those of other producers.

CLAMPING FERRULES

The clamping ferrules of the end connectors are in stainless steel AISI 304 (from DN6 to DN50) and in aluminium (from DN15 to DN50), materials firm and safe, which differing from brass, are not subjects to breakage given by stress corrosion.

Next to the peculiar specific qualities of the stainless steel, that is the resistance to corrosion and oxidation, the stainless steel clamping ferrules AISI 304 are solubilized so to stress relieve and reduce the superficial hardness of the material and avoid the possible development of splits during the pressing process.

PRESSURE

The pressure of the clamping ferrules to the braided hose and to the end connectors is made with an octagonal pressing process.

For special dimensional requirements is carried out a double pressing called "calibration" which allows a further external space reduction of the clamping ferrules.

IDENTIFICATION MARK

All Luxor's flexible hoses are clearly and rigorously marked with an identification mark on the clamping ferrules bearing the mark LUX, year of production and the technical-regulation quotes.

By marking the hose each producer assumes his responsibility of what is produced: BEWARE OF HOSES WITH NO NAME!

FITTINGS

The end connectors are produced in brass CW617N and CW614N with low lead content in compliance to the recent rules UNI EN12165 and UNI EN12164.

For some markets, or for some particular applications, are also available fittings in brass CW602N, which differs from the commonly used brass, since it prevents the brass from dezincification caused by the loss of zinc and the consequent redeposit of copper.

Though the percentage of lead within the brass alloys for the fittings are low and guaranteed by the European regulation, the new challenge that producers of plumbing material are facing is the total exclusion of lead from the manufactured products. With the main target to constantly improve the hygienic quality of the product and to improve the pureness of the materials, Luxor is engaged to use for particular markets brass Ecobrass type with zero percentage of lead.

The fittings, based on the specific markets demands or on product certification requirement, undergo further manufacturing processes such as: normalization (to stress relieve the material and reduce the surface hardness and avoid the occurring of production cracks).

For particular application, where high resistance to oxidation and good resistance to mechanical stress is required, the fittings are produced in stainless steel AISI304.

Other fittings are produced in deoxidated phosphor cooper Cu-DHP quality with chemical composition: Cu 99,9% min, whose mechanical qualities, dimensions and tolerances are in compliance to the EN1057 rule and its connected regulations.

For particular requirements and for those markets less demanding are also available end connectors in steel AVP.

SEALING GASKETS AND O-RINGS

The water tightness of the end connectors is guaranteed by the use of gaskets and o-rings in EPDM and NBR, materials with high ozone free properties, which preserve their tightening features and mechanical resistance throughout times.

The compounds used, thanks to the excellent hygienic properties, are fit for drinking water adduction, and have been approved by the most rigorous Certification Institutes of the hydrosanitary field.

The mechanical, physical and hygienic qualities of the gaskets and o-rings are constantly tested with specific laboratory tests both carried out internally or externally to verify their conformity to the rules requirements.

TYPE OF FITTINGS

Luxor's main target is that to satisfy the customer during the development process of the new products and give new technical solutions.

Inliner Range	Nominal Diameter				
Silicone EPDM Thermoplastic PEX	DN6	**Short male** M 8x1 - 18 mm M 10x1 - 18 mm M 11x1 - 20 mm	**Medium male** M 8x1 - 44 mm M 10x1 - 44 mm	**Long male** M 8x1 - 74 mm M 10x1 - 74 mm	**Smooth Pipe** ø 10 mm
		Safety end Pipe ø 8 mm ø 10 mm	**Female without gasket** G 1/4 - G 3/8 - G 1/8 G 1/2 - M 10x1 M 15x1 M 12x1 - 9/16 - 24 unef	**Collar** G 1/2	**Male** G 1/8 G 3/8 G 1/2
		Swivel Male M 12x1 M 15x1 G 3/8	**Female with gasket** G 3/8 - G 1/2 M 10x1 - M 15x1 9/16 - 24 unef		

Inliner Range	Nominal Diameter				
Silicone EPDM Thermoplastic Butyl	DN8	**Short male** M 10x1 - 18 mm M 11x1 - 19 mm M 12x1 - 19 mm	**Medium male** M 10x1 - 46 mm M 12x1 - 43 mm	**Long male** M 10x1 - 74 mm M 12x1 - 75 mm	**Smooth Pipe** ø 10 mm ø 15 mm
		Safety end Pipe ø 10 mm	**Male** G 1/4 G 3/8 G 1/2 G 3/4	**Female without gasket** G 1/4 - G 3/8 - G 1/2 G 3/4 - M 15x1	**Elbow Female without gasket** G 1/4 - G 3/8 G 1/2 - G 3/4
		Compressor Fitting ø 10 mm ø 12 mm ø 14 mm ø 15 mm	**Swivel Male** M 15x1 G 3/8 G 1/2	**Collar** G 1/2	**Female with o-ring** G 3/8
		Elbow Female with o-ring G 3/8	**Female with gasket** G 3/8 - G 1/2 G 3/4 - 1/2 NPSM 9/16 - 24 unef	**Elbow Female with gasket** G 3/8 - G 1/2 G 3/4	**Extended Male** G 3/8 - 26 mm G 1/2 - 28 mm
		Push-Fit Fitting ø 8			

Silicone EPDM Thermoplastic PEX Butyl

Please contact our technical department for further information

Inliner Range	Nominal Diameter				
EPDM Thermoplastic Butyl	DN10	**Short male** M 12x1 - 16 mm 	**Male** G 1/4 G 3/8 G 1/2 	**Female without gasket** G 3/8 G 1/2 G 3/4 	**Elbow Female without gasket** G 3/8 G 1/2 G 3/4 
		Compressor Fitting ø 10 mm ø 12 mm ø 14 mm ø 15 mm 	**Wings Female with or without o-ring** G 1/2 	**Swivel Male** G 3/8 G 1/2 	**Brass Push-Fit** ø 12 
		Female with gasket G 3/8 - G 1/2 G 3/4 	**Elbow Female with gasket** G 1/2 - G 3/4 	**Extended Male** G 3/8 - 26 mm G 1/2 - 28 mm 	

Inliner Range	Nominal Diameter				
Silicone EPDM Thermoplastic Butyl	DN13	**Male** G 3/8 G 1/2 G 3/4 	**Female without gasket** G 3/8 G 1/2 G 3/4 	**Elbow Female without gasket** G 1/2 G 3/4 G 1" 	**Smooth Pipe** ø 15 mm 
		Safety end Pipe ø 15 mm 	**Compressor Fitting** ø 12 mm ø 15 mm 	**Brass Push-Fit** ø 12 	**Female with gasket** G 1/2 - G 3/4 
		Elbow Female with gasket G 1/2 - G 3/4 	**Extended Male** G 1/2 - 28 mm 		

Inliner Range	Nominal Diameter				
EPDM Butyl	DN15	**Male** G 1/2 G 3/4 	**Female** G 1/2 G 3/4 	**Elbow Female** G 1/2 G 3/4 	**Smooth Pipe** ø 15 mm 

Silicone EPDM Thermoplastic PEX Butyl

Please contact our technical department for further information

Inliner Range	Nominal Diameter								
Silicone EPDM Butyl	DN18	**Male** G 3/4 G 1”		**Female** G 3/4 G 1”		**Elbow Female** G 3/4 G 1”		**Smooth Pipe** ø 22 mm	

Inliner Range	Nominal Diameter								
Silicone EPDM Butyl	DN25	**Male** G 1”		**Female** G 1” G 1" 1/4 G 1" 1/2		**Elbow Female** G 1”		**Smooth Pipe** ø 28 mm	

Inliner Range	Nominal Diameter						
Silicone EPDM Butyl	DN32	**Male** G 1” 1/4		**Female** G 1” 1/4		**Elbow Female** G 1” 1/4	

Inliner Range	Nominal Diameter				
EPDM	DN40	**Male** G 1” 1/2		**Female** G 1” 1/2	

Inliner Range	Nominal Diameter				
EPDM	DN50	**Male** G 2”		**Female** G 2”	

Silicone EPDM Thermoplastic PEX Butyl

Please contact our technical department for further information

APPROVALS

Nominal Diameter								
DN6	kiwa UNI IT-DT-Ki0413	Nation: Italy Certification: DM 174 Inliner Range: Silicone, EPDM, Thermoplastic, PEX	WaterMark	Nation: Australia Certification: WATERMARK Inliner Range: Silicone, EPDM, Thermoplastic, PEX	VA	Nation: Denmark Certification: VA Inliner Range: Silicone, Thermoplastic		
	QB	Nation: France Certification: QB Inliner Range: Silicone, EPDM, Thermoplastic, PEX	DVGW	Nation: Germany Certification: DVGW Inliner Range: Silicone, Thermoplastic, PEX		Nation: Norway Certification: SINTEF Inliner Range: Silicone, Thermoplastic, PEX		
	kiwa	Nation: Holland Certification: KIWA Inliner Range: Silicone, Thermoplastic, PEX	SVGW SSIGE	Nation: Switzerland Certification: SVGW Inliner Range: Silicone, Thermoplastic		Nation: Sweden Certification: RISE Inliner Range: Silicone, Thermoplastic, PEX		
	NSF UPC	Nation: USA Certification: NSF - IAPMO Inliner Range: Silicone, EPDM, Thermoplastic (NSF - IAPMO) PEX (NSF)	EN 13618	Nation: UE Certification: EN 13618 Inliner Range: Silicone, EPDM, Thermoplastic, PEX	WRAS	Nation: UK Certification: WRAS Inliner Range: Silicone, EPDM, Thermoplastic, PEX		

Nominal Diameter								
DN8	kiwa UNI IT-DT-Ki0413	Nation: Italy Certification: DM 174 Inliner Range: Silicone, EPDM, Thermoplastic	WaterMark	Nation: Australia Certification: WATERMARK Inliner Range: Silicone, EPDM, Thermoplastic	VA	Nation: Denmark Certification: VA Inliner Range: Silicone, Thermoplastic		
	QB	Nation: France Certification: QB Inliner Range: Silicone, EPDM, Thermoplastic	DVGW TÜV	Nation: Germany Certification: DVGW - TÜV Inliner Range: Silicone (DVGW - TÜV) Thermoplastic (DVGW)		Nation: Norway Certification: SINTEF Inliner Range: Silicone, Thermoplastic		
	kiwa	Nation: Holland Certification: KIWA Inliner Range: Silicone, Thermoplastic	SVGW SSIGE	Nation: Switzerland Certification: SVGW Inliner Range: Silicone, Thermoplastic		Nation: Sweden Certification: RISE Inliner Range: Silicone, Thermoplastic		
	NSF UPC	Nation: USA Certification: NSF - IAPMO Inliner Range: Silicone, EPDM, Thermoplastic	EN 13618	Nation: UE Certification: EN 13618 Inliner Range: Silicone, EPDM, Thermoplastic	WRAS	Nation: UK Certification: WRAS Inliner Range: Silicone, EPDM, Thermoplastic		

Silicone · EPDM · Thermoplastic · PEX

Please contact our offices for information about technical specifications and certified products or visit the website of the corresponding certification body for the latter. Please refer to www.nsf.org for a complete list of NSF approved products. Please refer to www.iapmort.org for a complete list of UPC/cUPC approved products.

Nominal Diameter						
DN10	Nation: Italy Certification: DM 174 Inliner Range:		Nation: Australia Certification: WATERMARK Inliner Range:		Nation: Denmark Certification: VA Inliner Range:	
	Nation: France Certification: QB Inliner Range:		Nation: Germany Certification: DVGW - TÜV Inliner Range: (TÜV) (DVGW)		Nation: Norway Certification: SINTEF Inliner Range:	
	Nation: Holland Certification: KIWA Inliner Range:		Nation: Switzerland Certification: SVGW Inliner Range:		Nation: Sweden Certification: RISE Inliner Range:	
	Nation: USA Certification: NSF - IAPMO Inliner Range:		Nation: UE Certification: EN 13618 Inliner Range:		Nation: UK Certification: WRAS Inliner Range:	

Nominal Diameter						
DN13	Nation: Italy Certification: DM 174 Inliner Range:		Nation: Australia Certification: WATERMARK Inliner Range:		Nation: Denmark Certification: VA Inliner Range:	
	Nation: France Certification: QB Inliner Range:		Nation: Germany Certification: DVGW - TÜV Inliner Range: (DVGW - TÜV) (TÜV) (DVGW)		Nation: Norway Certification: SINTEF Inliner Range:	
	Nation: Holland Certification: KIWA Inliner Range:		Nation: Switzerland Certification: SVGW Inliner Range:		Nation: Sweden Certification: RISE Inliner Range:	
	Nation: USA Certification: NSF - IAPMO Inliner Range:		Nation: UE Certification: EN 13618 Inliner Range:		Nation: UK Certification: WRAS Inliner Range:	

Silicone EPDM Thermoplastic PEX

Please contact our offices for information about technical specifications and certified products or visit the website of the corresponding certification body for the latter. Please refer to www.nsf.org for a complete list of NSF approved products. Please refer to www.iapmort.org for a complete list of UPC/cUPC approved products.

Nominal Diameter							
DN15	QB	Nation: France Certification: QB Inliner Range:	TÜV	Nation: Germany Certification: TÜV Inliner Range:	EN 13618	Nation: UE Certification: EN 13618 Inliner Range:

Nominal Diameter							
DN18	QB	Nation: France Certification: QB Inliner Range:	DVGW, TÜV	Nation: Germany Certification: DVGW - TÜV Inliner Range: (DVGW - TÜV) (TÜV)	EN 13618	Nation: UE Certification: EN 13618 Inliner Range:
	WRAS	Nation: UK Certification: WRAS Inliner Range:				

Nominal Diameter							
DN25	QB	Nation: France Certification: QB Inliner Range:	DVGW, TÜV	Nation: Germany Certification: DVGW - TÜV Inliner Range: (DVGW - TÜV) (TÜV)	EN 13618	Nation: UE Certification: EN 13618 Inliner Range:

Nominal Diameter				
DN32	QB	Nation: France Certification: QB Inliner Range:	DVGW, TÜV	Nation: Germany Certification: DVGW - TÜV Inliner Range: (DVGW - TÜV) (TÜV)

Nominal Diameter				
DN40	ACS	Nation: France Certification: QB Inliner Range:	TÜV	Nation: Germany Certification: TÜV Inliner Range:

Nominal Diameter				
DN50	ACS	Nation: France Certification: QB Inliner Range:	TÜV	Nation: Germany Certification: TÜV Inliner Range:

Silicone EPDM

Please contact our offices for information about technical specifications and certified products or visit the website of the corresponding certification body for the latter. Please refer to www.nsf.org for a complete list of NSF approved products. Please refer to www.iapmort.org for a complete list of UPC/cUPC approved products.

LUXOR®

FLEXIBLE HOSES FOR KITCHEN

2.1 / K-FLEX

K-FLEX

IDEAL FOR KITCHEN HAND SHOWER

Ideal for connecting pull-out/pull-down hand showers that can be used for kitchen taps. The standard size is DN8 with nylon braid in grey, black and white.

Brass fittings and stainless steel sockets.

TECHNICAL DATA

DN	Max temperature	Max pressure	Flow rate at 3 bar
8	70 °C	10 bar	28 l/min

Min. bending radius	Inliner pipe	Braiding	Fittings
48 mm	EPDM	NYLON PA 6.6	CW617N

APPLICATIONS

kitchen pull-out shower

INLINER PIPE

EPDM
EPDM rubber is the most widespread inliner material. Available in various compounds, it shows excellent hygienic and mechanical characteristics as well as resistance to oxidation, environmental factors and high temperatures.

TYPE OF FITTINGS

Swivel Male
M 15x1

Conical Collar with dribble-proof o-ring and adjustable balance weight
G 1/2

APPROVALS

EN 13618
UE

Instructions
Pag. 118

Please contact our technical department for further information

KF 801

● M 15x1

● G 1/2

Swivel Male

Conical Collar with dribble-proof o-ring and adjustable balance weight

CODE	FITTINGS	DN	BRAIDING COLOUR	LENGHT mm	g		
CPACTF1200LAG	Swivel Male **M 15x1** Conical Collar with dribble-proof o-ring and adjustable balance weight **G 1/2**	8	Black nylon	1200	365	1	50
CPACTF1500LAG				1500	388	1	50

KF 802

● M 15x1

● G 1/2

Swivel Male

Conical Collar with dribble-proof o-ring and adjustable balance weight

CODE	FITTINGS	DN	BRAIDING COLOUR	LENGHT mm	g		
CLACTF1200LAG	Swivel Male **M 15x1** Conical Collar with dribble-proof o-ring and adjustable balance weight **G 1/2**	8	Grey nylon	1200	365	1	50
CLACTF1500LAG				1500	388	1	50

KF 803

● M 15x1

● G 1/2

Swivel Male

Conical Collar with dribble-proof o-ring and adjustable balance weight

CODE	FITTINGS	DN	BRAIDING COLOUR	LENGHT mm	g		
CNACTF1200LAG	Swivel Male **M 15x1** Conical Collar with dribble-proof o-ring and adjustable balance weight **G 1/2**	8	White nylon	1200	365	1	50
CNACTF1500LAG				1500	388	1	50

DN	Max temperature	Max pressure	Flow rate at 3 bar	Min. bending radius	Inliner pipe	Braiding	Fittings	Instructions
8	70 °C	10 bar	28 l/min	48 mm	EPDM	NYLON PA 6.6	CW617N	Pag. 118

LUXOR®

FLEXIBLE HOSES FOR KITCHEN

2.2 / FLEXY MIX

FLEXY MIX

IDEAL FOR TAPS

The combination of stainless steel braid and EPDM inner pipe allows a flexible, simple and safe connection. It is a high quality product, in compliance with international requirements of the sector.

TECHNICAL DATA

DN	Max temperature	Max pressure	Flow rate at 3 bar
8	70 °C	10 bar	28 l/min

Min. bending radius	Inliner pipe	Braiding	Fittings
48 mm	EPDM	INOX AISI 304	CW617N

APPLICATIONS

traditional taps

mixers

INLINER PIPE

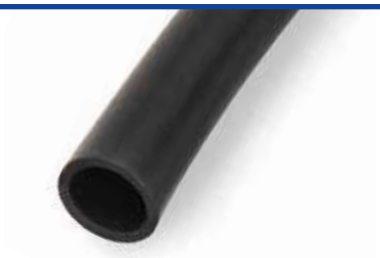

EPDM
EPDM rubber is the most widespread inliner material. Available in various compounds, it shows excellent hygienic and mechanical characteristics as well as resistance to oxidation, environmental factors and high temperatures.

TYPE OF FITTINGS

Short Male
M 10x1 - 18 mm

Medium Male
M 10x1 - 46 mm

Female with gasket inserted
G 3/8
G 1/2

Safety end Pipe
Ø 10 mm

Compressor Fitting
G 3/8 Ø 10 mm

APPROVALS

EN 13618
UE

Instructions
Pag. 118

Please contact our technical department for further information

FX 801

● M 10x1

● G 3/8

Short Male

Female with gasket inserted

CODE	FITTINGS	DN	LENGHT mm			
CGAKLS0200LAL	Short Male **M 10x1** Female with gasket inserted **G 3/8**	8	200	63	-	25
CGAKLS0250LAL			250	70	-	25
CGAKLS0300LAL			300	76	-	25
CGAKLS0350LAL			350	83	-	25
CGAKLS0400LAE			400	90	10	-
CGAKLS0500LAE			500	104	10	-
CGAKLS0600LAE			600	117	10	-

FX 802

● M 10x1

● G 1/2

Short Male

Female with gasket inserted

CODE	FITTINGS	DN	LENGHT mm			
CGAKJS0200LAL	Short Male **M 10x1** Female with gasket inserted **G 1/2**	8	200	78	-	25
CGAKJS0250LAL			250	85	-	25
CGAKJS0300LAL			300	92	-	25
CGAKJS0350LAL			350	99	-	25
CGAKJS0400LAE			400	106	10	-
CGAKJS0500LAE			500	119	10	-
CGAKJS0600LAE			600	133	10	-

FX 803

● M 10x1

● G 3/8

Medium Male

Female with gasket inserted

CODE	FITTINGS	DN	LENGHT mm			
CGASES0200LAL	Medium Male **M 10x1** Female with gasket inserted **G 3/8**	8	200	69	-	25
CGASES0250LAL			250	76	-	25
CGASES0300LAL			300	83	-	25
CGASES0350LAL			350	90	-	25
CGASES0400LAE			400	96	10	-
CGASES0500LAE			500	110	10	-
CGASES0600LAE			600	124	10	-

FX 804

● M 10x1

● G 1/2

Medium Male

Female with gasket inserted

CODE	FITTINGS	DN	LENGHT mm			
CGASDS0200LAL	Medium Male **M 10x1** Female with gasket inserted **G 1/2**	8	200	85	-	25
CGASDS0250LAL			250	92	-	25
CGASDS0300LAL			300	98	-	25
CGASDS0350LAL			350	105	-	25
CGASDS0400LAE			400	112	10	-
CGASDS0500LAE			500	126	10	-
CGASDS0600LAE			600	139	10	-

DN	Max temperature	Max pressure	Flow rate at 3 bar	Min. bending radius	Inliner pipe	Braiding	Fittings	Instructions
8	70 °C	10 bar	28 l/min	48 mm	EPDM	INOX AISI 304	CW617N	Pag. 118

FX 805

● ø 10 mm

● G 3/8 Ø 10 mm

Safety end Pipe

Compressor Fitting

CODE	FITTINGS	DN	LENGHT mm			
CGA3GS0200LAL	Safety end Pipe **ø 10 mm** Compressor Fitting **G 3/8 ø 10 mm**	8	200	75	-	25
CGA3GS0250LAL			250	82	-	25
CGA3GS0300LAL			300	89	-	25
CGA3GS0350LAL			350	96	-	25
CGA3GS0400LAE			400	102	10	-
CGA3GS0500LAE			500	116	10	-
CGA3GS0600LAE			600	130	10	-

DN	Max temperature	Max pressure	Flow rate at 3 bar	Min. bending radius	Inliner pipe	Braiding	Fittings	Instructions
8	70 °C	10 bar	28 l/min	48 mm	EPDM	INOX AISI 304	CW617N	Pag. 118

LUXOR®

FLEXIBLE HOSES FOR KITCHEN

2.3 / FLEXY MIX PT+

FLEXY MIX PT+

SPECIAL SILICONE TAPS

The Platinum Silicone inliner gives the hoses excellent hygienic properties as well as a high resistance to pressure and temperature is therefore particularly suitable for environments with strict hygienic requirements such as healthcare facilities.

TECHNICAL DATA

DN	Max temperature	Max pressure	Flow rate at 3 bar
8	70 °C	10 bar	28 l/min

Min. bending radius	Inliner pipe	Braiding	Fittings
48 mm	SILICONE	INOX AISI 304	CW617N

APPLICATIONS

traditional taps

mixers

INLINER PIPE

SILICONE

Silicone, a noble high-quality material, has gained growing recognition on sanitary markets at an international level.

It is the most hygienic material available on the market and guarantees complete purity. Outstanding elasticity and excellent mechanical properties throughout the temperature range exemplify its characteristics.

TYPE OF FITTINGS

Short Male
M 10x1 - 18 mm

Medium Male
M 10x1 - 46 mm

Female with gasket inserted
G 3/8
G 1/2

APPROVALS

DM 174
Italy

EN 13618
UE

DVGW
Germany

Instructions
Pag. 118

Please contact our technical department for further information

FP 801

● M 10x1

● G 3/8

Short Male

Female with gasket inserted

CODE	FITTINGS	DN	LENGHT mm			
CHQKLS0200DML	Short Male **M 10x1** Female with gasket inserted **G 3/8**	8	200	58	-	25
CHQKLS0250DML			250	65	-	25
CHQKLS0300DML			300	71	-	25
CHQKLS0350DML			350	77	-	25
CHQKLS0400DME			400	84	10	-
CHQKLS0500DME			500	96	10	-
CHQKLS0600DME			600	109	10	-

FP 802

● M 10x1

● G 1/2

Short Male

Female with gasket inserted

CODE	FITTINGS	DN	LENGHT mm			
CHQKJS0200DML	Short Male **M 10x1** Female with gasket inserted **G 1/2**	8	200	62	-	25
CHQKJS0250DML			250	69	-	25
CHQKJS0300DML			300	75	-	25
CHQKJS0350DML			350	81	-	25
CHQKJS0400DME			400	88	10	-
CHQKJS0500DME			500	100	10	-
CHQKJS0600DME			600	113	10	-

FP 803

● M 10x1

● G 3/8

Medium Male

Female with gasket inserted

CODE	FITTINGS	DN	LENGHT mm			
CHQSES0200DML	Medium Male **M 10x1** Female with gasket inserted **G 3/8**	8	200	66	-	25
CHQSES0250DML			250	72	-	25
CHQSES0300DML			300	79	-	25
CHQSES0350DML			350	85	-	25
CHQSES0400DME			400	91	10	-
CHQSES0500DME			500	104	10	-
CHQSES0600DME			600	116	10	-

FP 804

● M 10x1

● G 1/2

Medium Male

Female with gasket inserted

CODE	FITTINGS	DN	LENGHT mm			
CHQSDS0200DML	Medium Male **M 10x1** Female with gasket inserted **G 1/2**	8	200	70	-	25
CHQSDS0250DML			250	76	-	25
CHQSDS0300DML			300	83	-	25
CHQSDS0350DML			350	89	-	25
CHQSDS0400DME			400	95	10	-
CHQSDS0500DME			500	108	10	-
CHQSDS0600DME			600	120	10	-

DN	Max temperature	Max pressure	Flow rate at 3 bar	Min. bending radius	Inliner pipe	Braiding	Fittings	Instructions
8	70 °C	10 bar	28 l/min	48 mm	SILICONE	INOX AISI 304	CW617N	Pag. 118

ASSEMBLY INSTRUCTIONS

Luxor's flexible hoses are produced for water adduction and distribution. The use of other liquid elements or chemical solutions is not guaranteed if not clearly agreed with the Technical Office.
Always carry out system test after the installation of the flexible hoses to check leakages or functional products defects.

Test the correct grounding of the electrical appliances (air conditioning systems, whirlpools, etc.) where hoses are connected. Any possible electrical dispersion could favor corrosive actions.
For installations in rooms with high humidity, where there is condensation, it is necessary to use flexible hoses with braiding and ferrules in stainless steel.

Design the system using hoses of adequate length and fittings to minimise hose twists and tensions (always check the product datasheets).

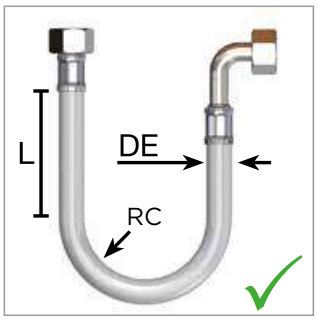

RC ≥ 4 DE L ≥ 4 DE

Always check that ferrules are pressed correctly and there are no braiding threads coming out. In case of doubts do not install the flexible hose.

The hoses must maintain a straight section at the connections equal to 4 times the external diameter of the hose (DN6 = Ø 10 mm → straight section 40 mm).
The bending radius must not be less than 4 times the external diameter of the hose (DN6 = Ø 10 mm → bending radius 40 mm).

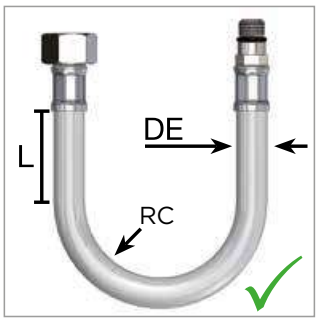

RC ≥ 4 DE L ≥ 4 DE

Do not install flexible hoses under twisting or tension conditions.

It must be possible to inspect the hoses. Do not install inside walls or in tunnels that cannot be inspected. Do not cover with insulating material (except for hoses with stainless steel braid and stainless steel ferrules.

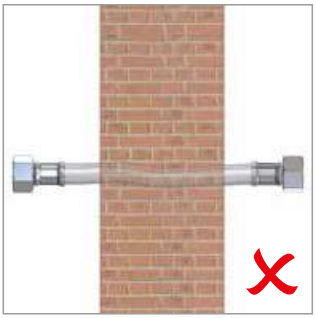

Use only tools suitable for the type of product. The tools must only be used in the presence of a hexagonal nut. Any other configuration (cylindrical fitting, knurled ring nut, ...) must be closed by hand (closing force not exceeding 3 Nm).

Do not use any tools on the ferrules. A force applied to this ferrule often causes it to become damaged with consequent breakage of the hose.

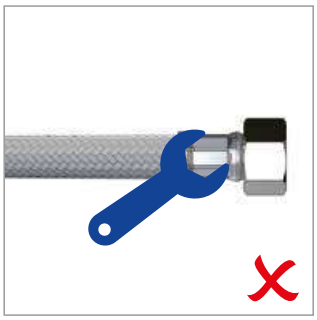

Never assemble two or more hoses in series. If necessary, choose a longer length.

Avoid striking the hose with sharp or pointed objects to avoid damaging the external braid.

NORMAL END CONNECTION FITTINGS

For a correct assembly please keep to the follow below instructions:

- check the threading of the fitting (A) of the flexible hose which must be corresponding to the one of the faucet's body (B);
- check that the gasket is regularly placed on the female fitting (C);
- do not use hemp and/or Teflon on the thread (A) of the fitting.

Attention! Clamps from 2 to 3 Nm.

The male with o-ring seat are specially studied to guarantee the tightness betweeen the fitting and the body of the faucet.

It is not necessary to tighten with a key, the strength of the hand is enough.

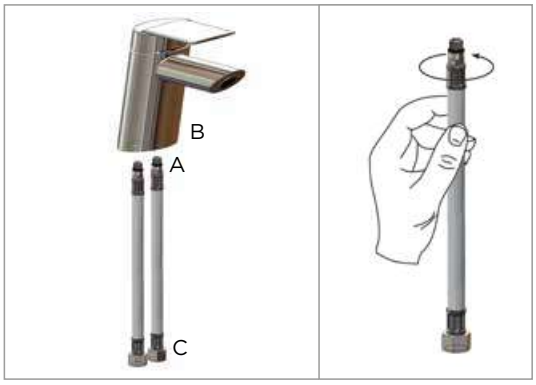

COMPRESSION FITTINGS

For a correct assembly please keep to the following instructions:

- check that the cartridge (2) is correctly installed as per scheme since if this is upside down it causes tightening problems;
- the fightening fittings must be connected to pipes with a wall tickness not less than 0,75 mm. The compression fittings RCG, RCC and RCB must be tightened with a clamping couple in a range 25 nad 30 Nm.

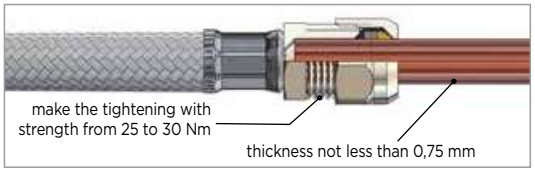

MAINTENANCE INSTRUCTIONS

- Periodically monitor the state of the hoses. In case of oxidation or evident state of wear, replace.
- Avoid direct or indirect exposure to corrosive substances, including substances used for cleaning (bleach and similar substances).
- For cleaning only use damp (not wet) cloths without the aid of cleaning substances.
- Avoid striking the hose with sharp or pointed objects to avoid breaking the external braid (including boxes and containers made of metal, wood or other materials).
- In the case of systems in periodically uninhabited places (for example holiday homes or in places with particularly harsh climatic conditions) always check closure of the system and, in any case, avoid leaving the system pressurised.

LENGTH INSTRUCTIONS

All hose assemblies shall be manufactured in lengths L measured as shown in Figure from a minimum of 90 mm to a maximum of 2000 mm, in compliance with standard EN 13618.

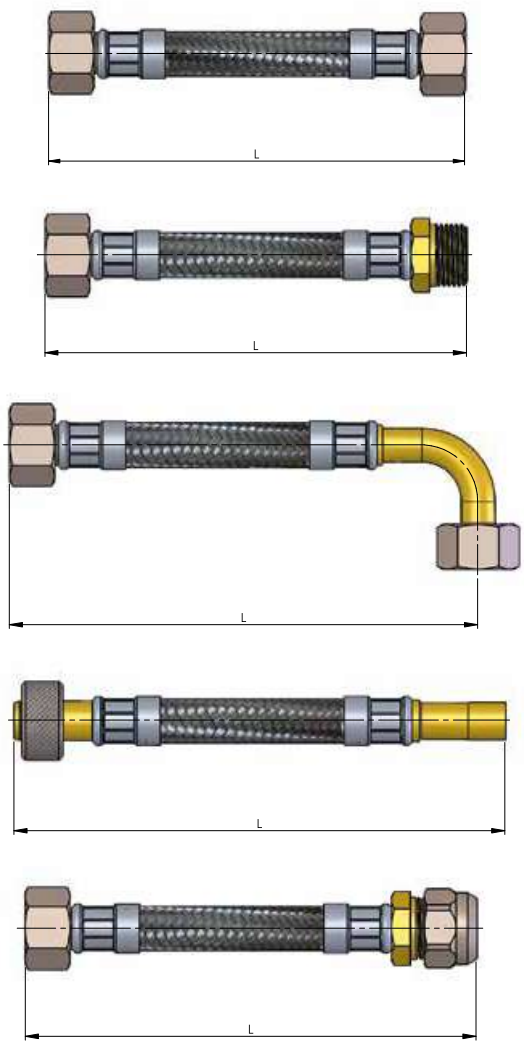

The actual length compared with the length L declared by the supplier shall be within the following permissible tolerances, in compliance with standard EN 13618:

- L ≤ 400 mm: +10 mm / 0
- 400 mm < L ≤ 1000 mm: +20 mm / 0
- 1000 mm < L ≤ 2000 mm: +30 mm / 0

LUXOR®

CONDITION OF SALE

ORDERS

Contracts entered by agents or representative are not definitive until they are regularly accepted by supplier. The orders sent either through our Agents or directly, are accepted under the "General Sales Conditions" described in the present Price List terms, and will agree, without reservation, to the terms below.

INCOTERMS

The consignments are always Ex works unless differently agreed in the sales contract.

PAYMENT TERMS

The payment terms are those specified in the offers and the order confirmation and are binding.
In case of delay of payment with respect to the agreed due terms, the commercial interest shall be calculated. The delayed payment of previous supplies will authorize us to cancel all orders in progress. Agents and representative are not entitled to collect credits, unless clearly authorised in writing by the supplier.

CLAIMS

Claims on quantities will be accepted within 8 days from the date of receipt of goods. The supplier will not be responsible for missing or damaged packages, unless in the despatch note it is clearly written "accepted with reservation".

COURT

For any controversies the place of jurisdiction shall be: the Court of Low of Brescia.

PRICES

Prices indicated are those clearly agreed in the contract sales confirmed by our order confirmation.

DELIVERY TERMS

The articles part of this catalogue will be consigned within a term of 90 days from order acceptance. Any date inferior to this term is not to be considered accepted unless confirmed in order confirmation.
The delivery times are not binding for the supplier, who will not respond for any damages arising directly or indirectly from delivery delays, or from a total or partial interruption of the supply.

PACKAGING

The standard packaging is at suppliers charges.
The standard packaging does not include special out of size or particular. Where any special packaging is required this will be at customer's charges, unless previously agreed in writing in the contract sales.

RETURN OF GOODS

No goods will be accepted without our previous authorization.

MINIMUM ORDER VALUE

The supplier in addition to checking the feasibility will have the right to deliver orders with a minimum value of 500 Euro.

WARRANTY

The guarantee terms refer to article 3 and 5 of the 199/44/CE Directive. The guarantee is supported by an adequate insurance policy for the "Product Third Party Liability". The guarantee declines any responsibility whereas the installation and the test have not been correctly carried out. The wholesalers and the retailers are compelled to illustrate to their customers and installers all the useful care for a correct installation of our materials.

CATALOGUE VALIDY

Illustrations, data and references published in this issue are not binding on the supplier who reserves the right to make reasonable changes, both technical and commercial, at his discretion at any time, still without lowering the design performance of the goods.